TECX UNIONS TECHNOLOGY CORP.
is your trusted partner

TU-333-VSC-015-SS7S1

SPECIFICATIONS

- **RATING : 2.5A / 250V AC**
  7 A / 125V AC
- **APPROVALS : UL/CUL/CCC/ENEC**

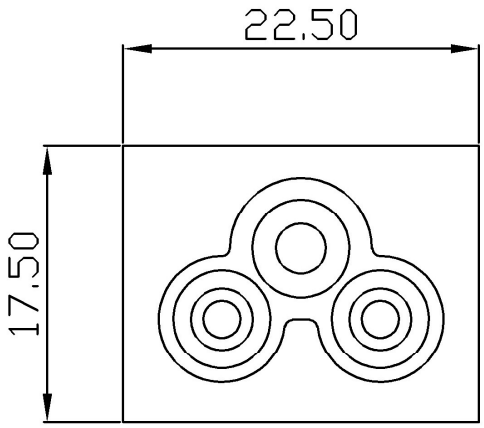

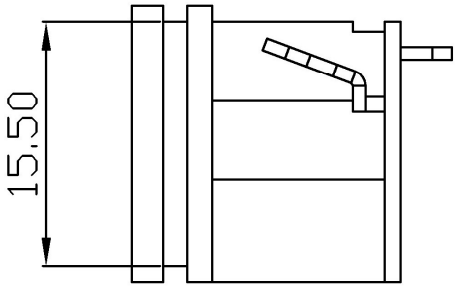

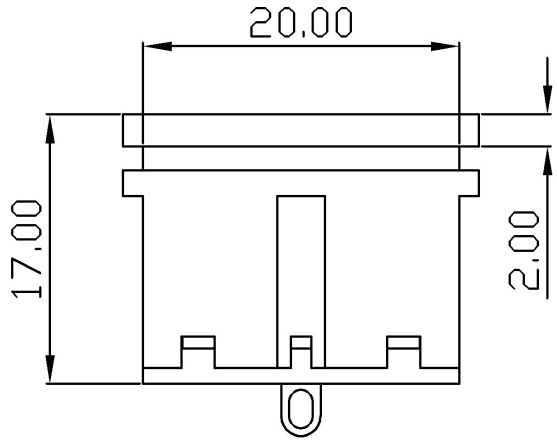

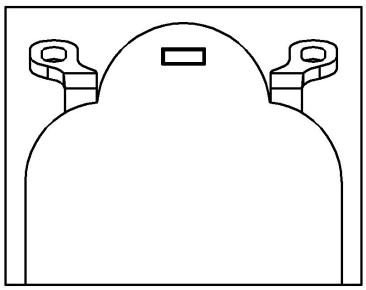

http://www.tecx.com.tw

Head office : T:+ 886-2-26957999 E.mail: amy@tecx.com.tw **Suzhou office**:T:86-512-63062593 E-mailL:james@tecx.com.cn

Factory : T:+86-755-84084576 E.maill: wan@tecx.com.cn **H.K office:** T:+852-27939186 E-mail:helen@hkwintech.com